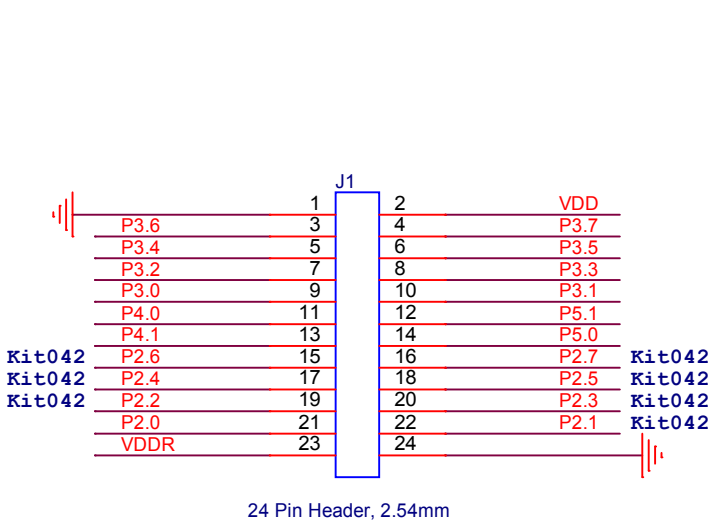

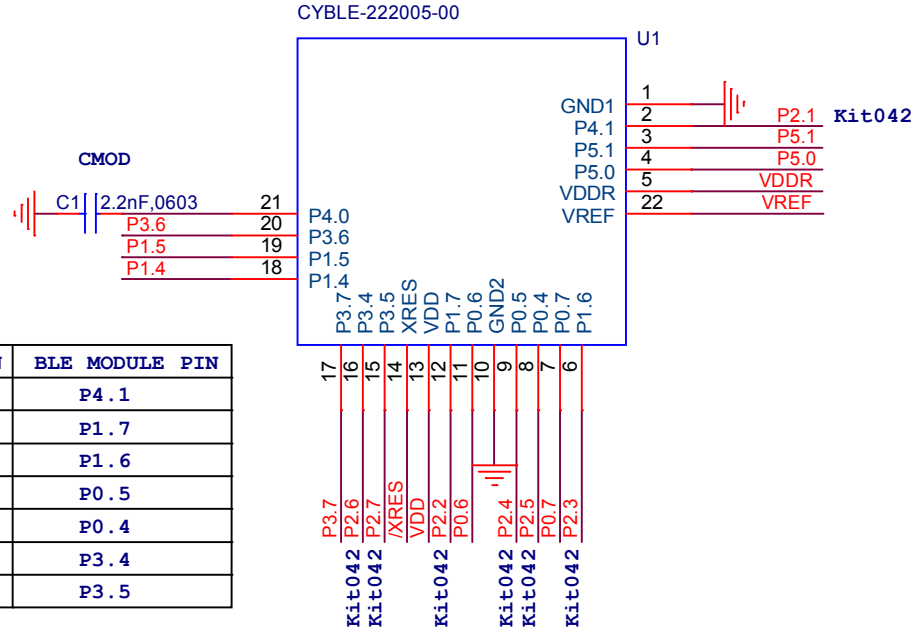

Kit042 PIN	BLE MODULE PIN
P2.1	P4.1
P2.2	P1.7
P2.3	P1.6
P2.4	P0.5
P2.5	P0.4
P2.6	P3.4
P2.7	P3.5

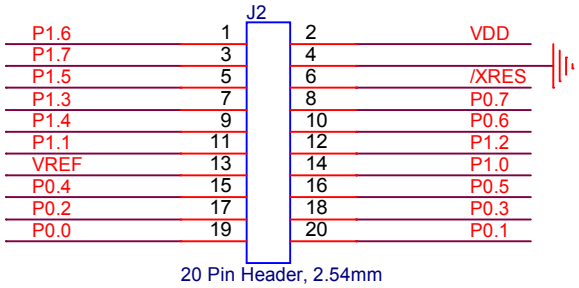

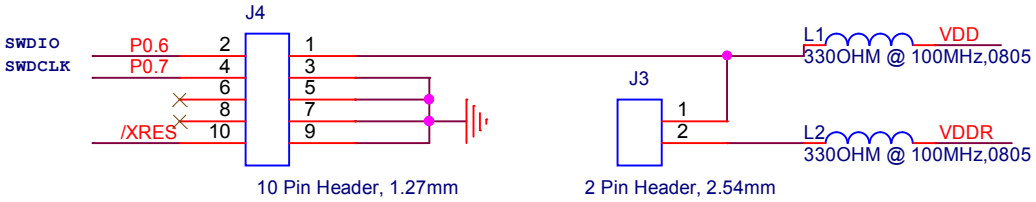

MiniProg3 Interface

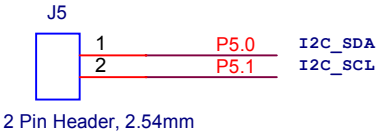

PCB: 600-20085-01
FAB DRW: 610-20085-01
ASSY DRW: 620-20085-01

CYPRESS SEMICONDUCTOR 2015

Title: CYBLE-222005-EVAL		
Size: A	Document Number: 630-20085-01	Rev: 1.1
Date: Monday, August 03, 2015	Sheet 1 of 1	